PUBLIC WORKS DIRECTOR

2-28-02

PLANS APPROVAL DATE

The County of Contra Costa or its officers or agents shall not be responsible for the accuracy or completeness of electronic copies of this plan sheet.

REGISTERED PROFESSIONAL ENGINEER — R. MITCH AVALON — No. 31422 — Exp. 12/31/04 — CIVIL — STATE OF CALIFORNIA

TWO LANE RURAL SHOULDER/LANE WIDTHS

	ADT<250	<400	<1000	<3000	<6000	>6000
MINIMUM (Shld backing/Shld/Lane)	1.5'/0/11'	0'/1'/11'	2'/1'/11'	2'/2'/12'	3'/4'/12'	3'/5'/12'
DESIRABLE[4] (Shld backing/Shld/Lane)	0'/1'/11'	2'/1'/11'	2'/4'/12'	2'/5'/12'	2'/6'/12'	0'/8'/12'

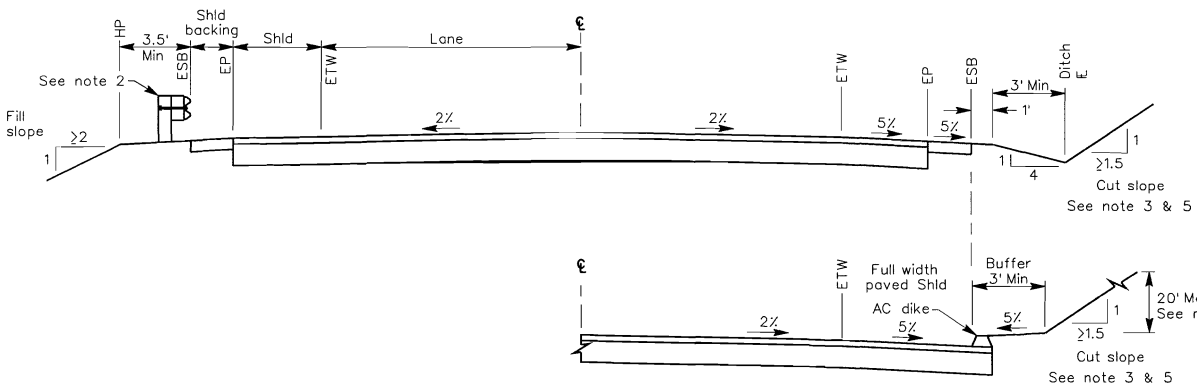

TYPICAL RURAL 2-LANE ROAD SECTION

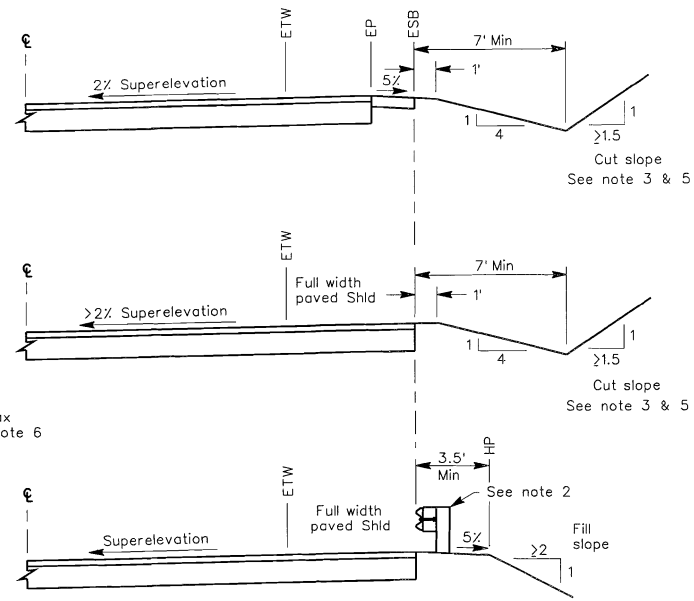

TYPICAL RURAL 2-LANE ROAD SUPERELEVATED SECTION

NOTES:

1. These guidelines do not override County Ordinance Code requirements for development projects.
2. Guardrail may be required, depending on embankment height and slope. (See Caltrans Guidelines)
3. Distance to cut slope from ETW may be increased for sight distance in curves. (See Caltrans Design Manual)
4. Use desirable if it does not significantly increase R/W or construction costs, especially where there is high percentage of trucks.
5. A wider swale and/or buffer between toe of slope and roadway should be considered where there is potential rock fall, the slope is highly erosive or there is significant longitudinal surface flows.
6. If cut slope is > 20' to bench or top of cut, buffer width shall be increased.
7. Design ADT shall be approved by the Public Works Department.

NO.	DATE	REVISION DESCRIPTION	BY
1	2-02	Supersedes Standard Plan CA53 dated 11-99	P.W.

COUNTY OF CONTRA COSTA
PUBLIC WORKS DEPARTMENT
MARTINEZ, CALIFORNIA

STANDARD PLAN

TWO LANE RURAL ROAD GUIDELINES

SCALE: NO SCALE — DATE: 2-02
DRAWN BY: L. COSTA — PLAN NO. CA53i
CHECKED BY: M. HOLLINGSWORTH

STD. PLAN CA53i